coronagroupinc

elements Mobiles-Tri-Leg Assembly Instructions

coronagroupinc

elements Mobiles Tri-Leg Assembly Instructions

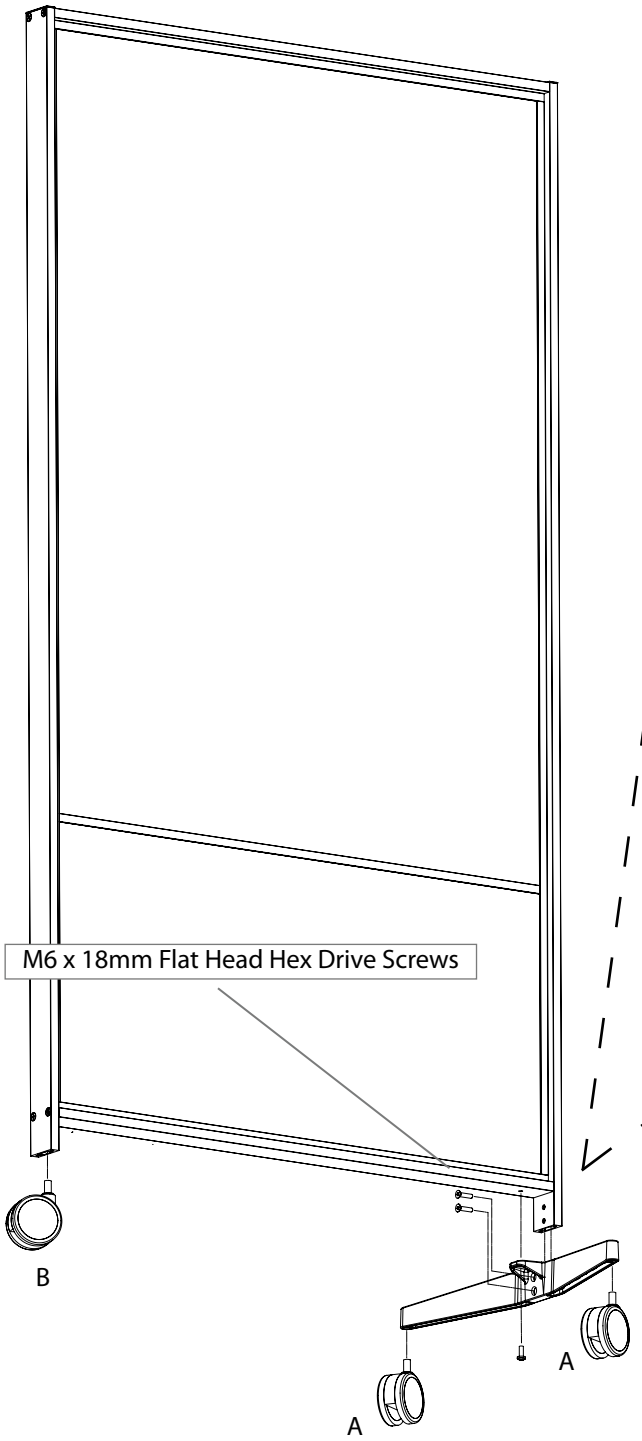

Items included (per board)	
1 set each	1 Foot Bracket 2 Locking Rear Casters 1 Non-Locking Front Casters
2 each	M6 x 18mm Flat Head Hex Drive Screws
1 each	M6 x 14mm Pan Head Phillips Drive Screws
1 each	4mm Hex Wrench

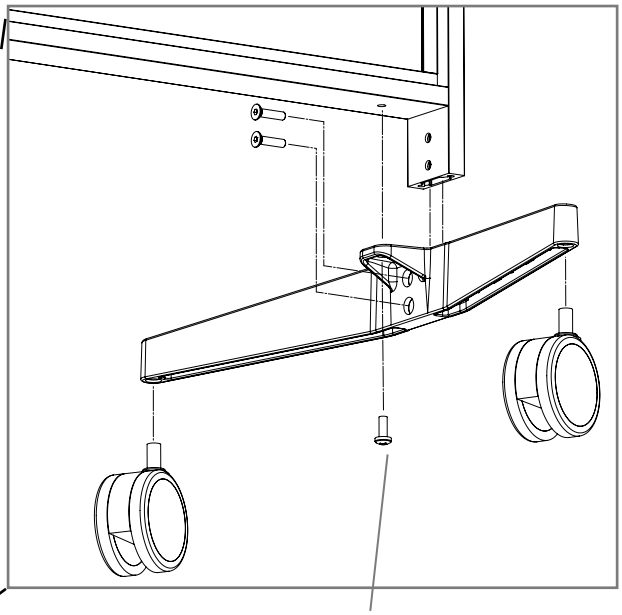

A Locking Casters
B Non-Locking Caster

coronagroupinc

p. 205.941.1942 • info@coronagroupinc.com • coronagroupinc.com